First Bipolar ECL Logic Circuits

ISSCC 1957

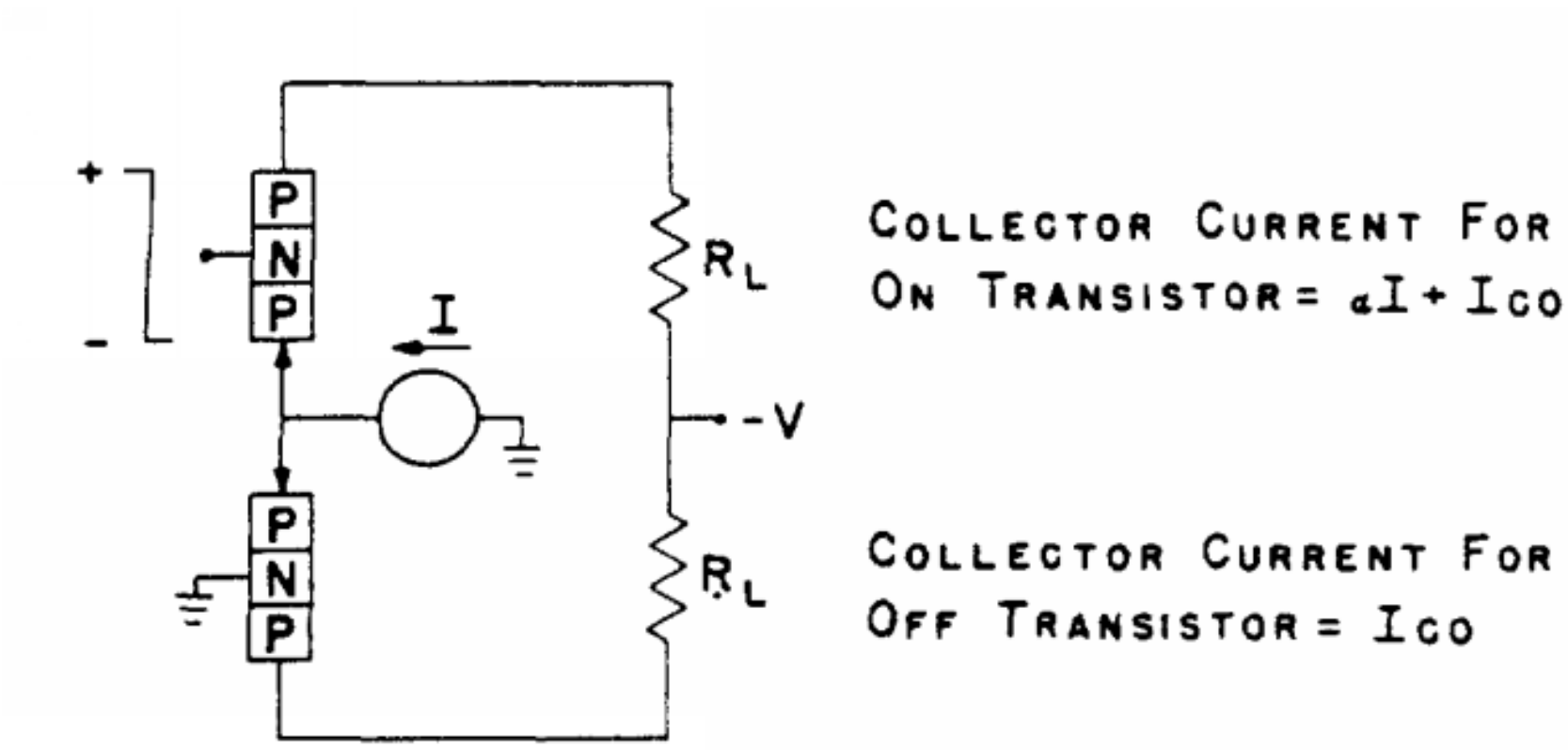

Millimicrosecond Transistor Current Switching Circuits

EARLIER DIRECT-COUPLED transistor logic circuit families suffered from noise-margin issues, saturation and other effects which degraded their speed. In order to address these issues, series resistors were inserted to provide robust high-speed circuit operation with low voltage swings, relying on the switching of a relatively constant current from one transistor emitter to another. These high-speed, high-power ECL (emitter coupled logic) circuits broke the nanosecond barrier (for circuit switching speed). For many years that followed, ECL circuits were used pervasively in high speed computing applications. Today, they are still used in applications requiring very high speed logic gates.

H.S. Yourke
IBM Research Center, Poughkeepsie, NY