A Multilevel-Cell Flash Memory Sense Amplifier

ISSCC 1995

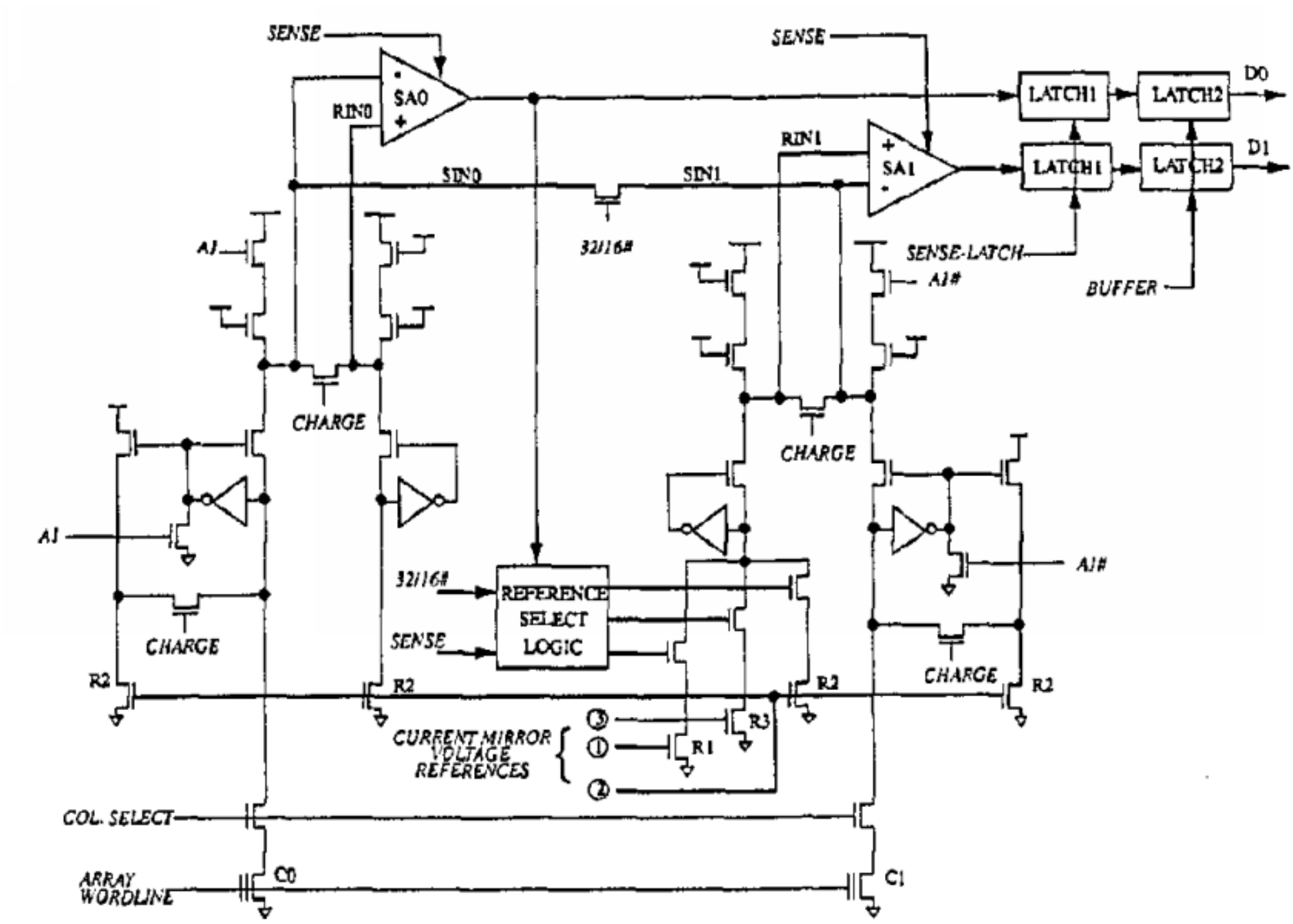

A Multilevel-Cell 32MB Flash Memory

IN 1995, BAUER (Intel) and his coworkers presented a 32M bit flash memory device using a 2 bit per cell. To achieve a tight Vt distribution, different reference cells and reference cell select logic were used in read, program verify, and erase verify operations. This binary search sensing scheme used ATD based latched sense amplifiers for glitch free operation.

M. Bauer, R. Alexis, G. Atwood, B. Baltar, A. Fazio, K. Frary,
M. Hensel, M. Ishac, J. Javanifard, M. Landgraf, D. Leak, K. Loe,
D. Mills, P. Ruby, R. Rozman, S. Sweha, S. Talreja, K. Wojciechowski
Intel Corporation, Folsorn, CA