FIRST ECHO CANCELER CHIP

ISSCC 1983

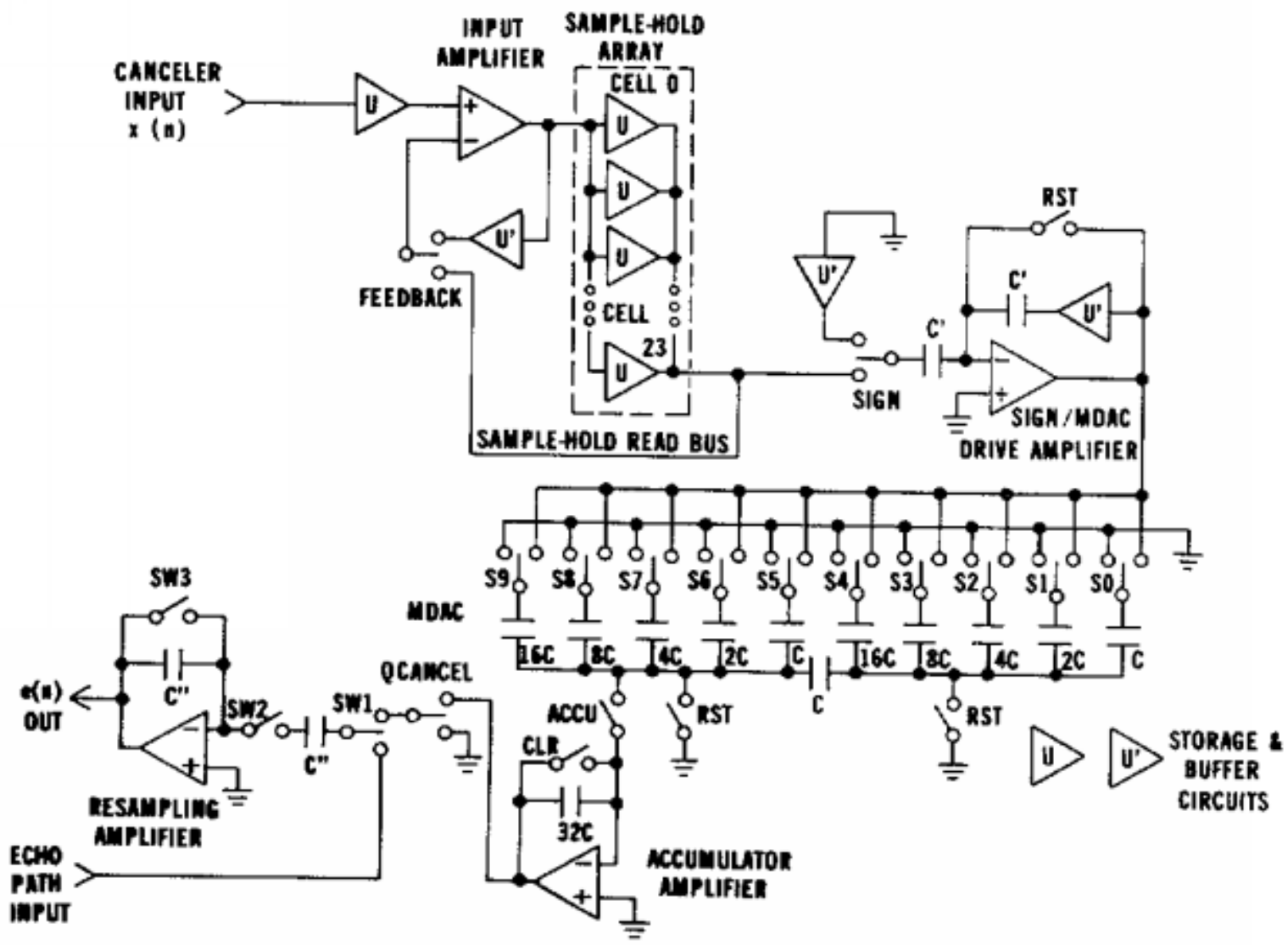

A Fully Adaptive Transversal Canceler and Equalizer Chip

THEORETICALLY, ONE COULD build a hybrid which would perfectly separate the transmitted and received signals on each individual single twisted pair telephone line out of a central office. An alternative to requiring perfect hybrids is to cancel the inevitable echoes of a transmitted signal automatically so they are not mistaken for a received signal. This 34mm^2 chip in CMOS technology includes all the timing, control and memory circuits for both a 24th-order adaptive canceler and a user-programmable eighth-order gain/slope equalizer. This chip provides performance and a level of integration that would be very difficult to obtain using bipolar technology.

E.J. Swanson, R.J. Starke, G.F. Gross, K.H. Olson, C.J. Waldron
Bell Laboratories, Reading PA

R.A. Copeland, S.A. Surek, R.J. Ribble
Bell Laboratories, Whippany, NJ

A.J. Vera
Bell Laboratories, North Andover, MA