Silicon Bandgap as a Temperature Stable Reference

ISSCC 1970

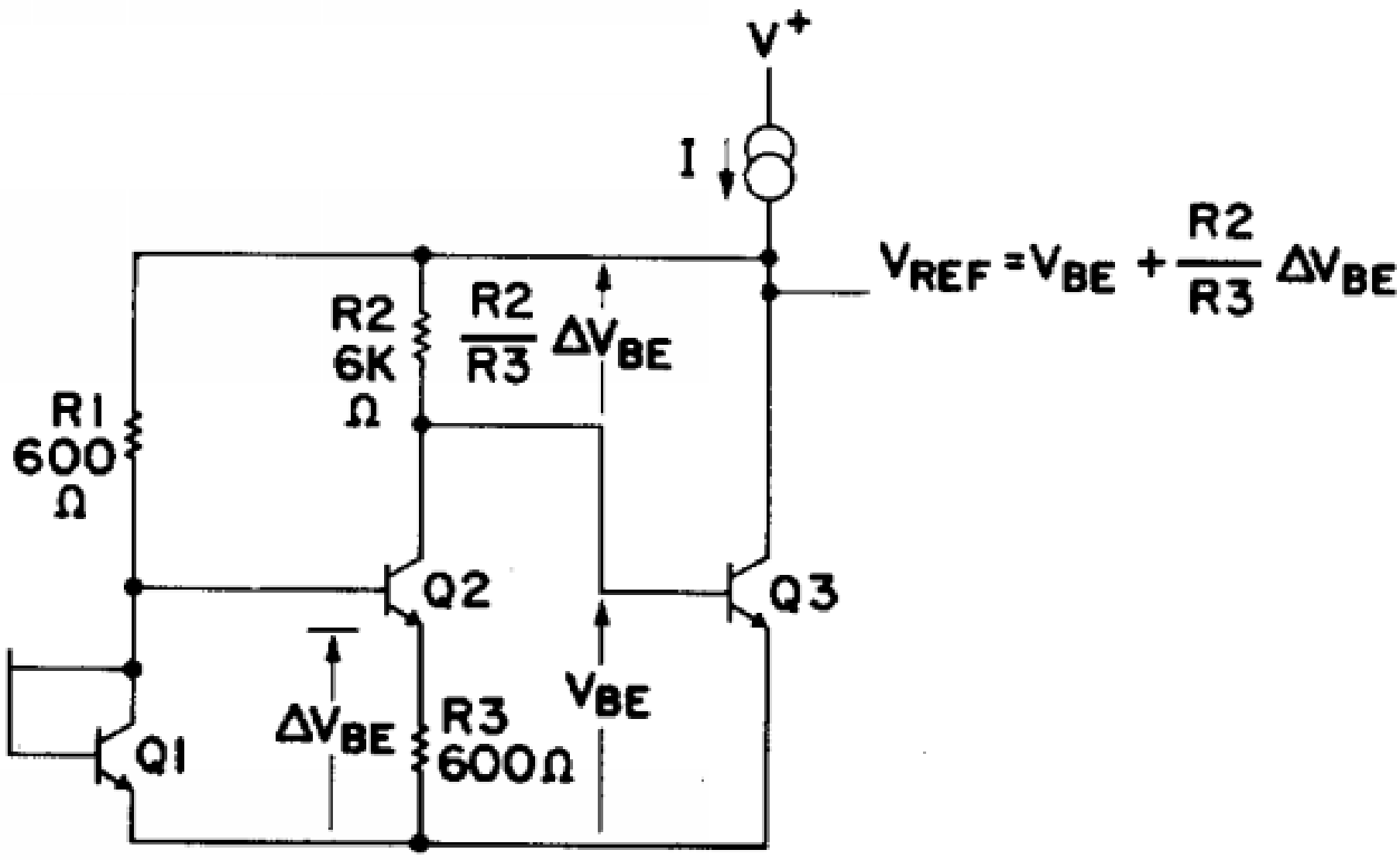

New Developments in IC Voltage Regulators

ONE OF THE fundamental requirements in analog signal processing is a stable reference level. This paper demonstrated the monolithic implementation of the bandgap reference voltage, which generates a temperature-stable constant voltage through the combination of a negative temperature coefficient of the emitter-base voltage with a positive temperature coefficient generated from the *difference* in the emitter base voltage of transistors running at different current densities. Variations of bandgap reference voltages have become universal, even in modern CMOS analog circuits.

R.J. Widlar
National Semiconductor Corp., Santa Clara, CA